715 Center Street
Grayslake IL 60030
P: 847-752-2700
F: 847-752-2415
E: info@livorsi.com

Electronic Throttle and Shift (ETS Controls)
Model # TH SERIES (All Configurations)

Installation Instructions

Thank you for choosing Livorsi Marine® controls. Your new marine engine controls feature a and are built entirely of bronze and stainless steel to insure years of trouble free service.
To install your controls the following tools are needed:
* Phillips screwdriver * 7/16" wrench or socket * 3/16" Allen wrench

Livorsi Marine® controls are very easy to install. Please follow these next few steps.

SHIFT LEVERS ONLY

1. Installation requires the use of 33 series cables. You will need 2 cables per engine; one for shifting and one for throttle. When installing new controls it is suggested to use new cables. When removing old cables, attach new cables and route as you remove old cables.
2. After connecting cables to engine and transmission, connect cables to controls using hardware provided. Screw end clevis on cable. Remove plate or brad on side of lever to expose installation point. Note: 3 mounting points are provided to adjust different cable throws.
3. Install pin in clevis and insert into desired mounting hole. Reinstall brad to hold pin.
4. Use "U" bracket to secure cable to base of control.
5. Repeat on additional handles before installing control in desired installation location.
6. Control is now ready to be installed in the desired location.

WARNING: Make sure to adjust cables before operating engines.
Adjust detent and friction to desired tension by turning the allen screw at base of handle.
Periodic lubrication of rubber boots in needed. Teflon base lubricant works best.

THROTTLE	CUTOUT DIMS	OVERALL DIMS
1 HANDLE	1 1/2 W x 6 1/2 L	2 1/4 W x 7 3/4 L
2 HANDLE	2 5/8 W x 6 1/2 L	3 3/8 W x 7 3/4 L
3 HANDLE	3 3/4 W x 6 1/2 L	4 3/8 W x 7 3/4 L
4 HANDLE	4 3/4 W x 6 1/2 L	5 5/8 W x 7 3/4 L
6 HANDLE	7 W x 6 1/2 L	7 3/4 W x 7 3/4 L

715 Center Street
Grayslake IL 60030
P: 847-752-2700
F: 847-752-2415
E: info@livorsi.com

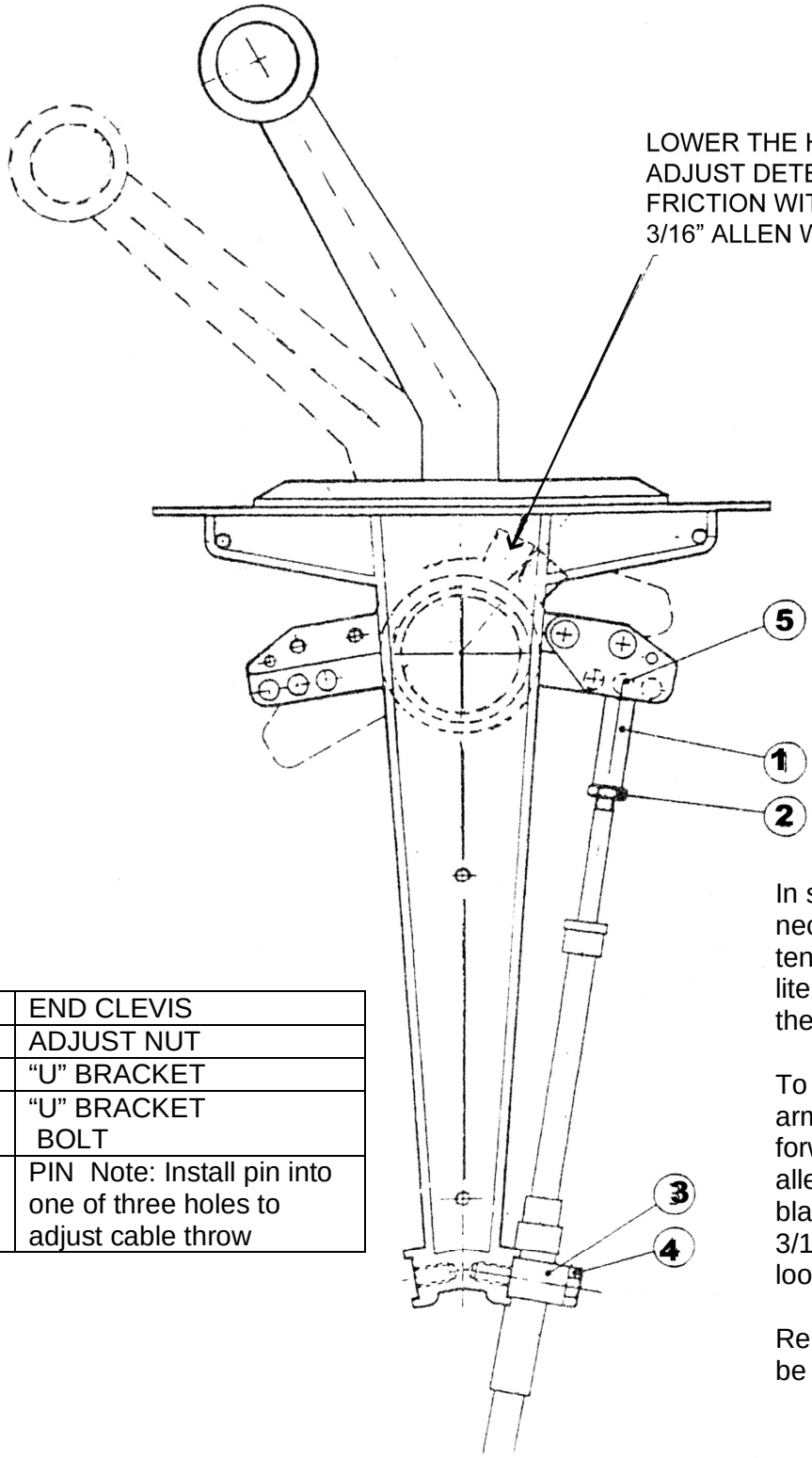

1	END CLEVIS
2	ADJUST NUT
3	"U" BRACKET
4	"U" BRACKET BOLT
5	PIN Note: Install pin into one of three holes to adjust cable throw

In some cases it may be necessary to adjust the unit's tension. This takes seconds, literally and can be done while the unit is mounted in boat.

To adjust controls: Place throttle arm and/or detent in the slightly forward position. Using a 3/16" allen wrench, reach through the black rubber to the 3/16" set screw. Tighten or loosen as needed.

Reminder: Rubber boots should be lubricated periodically.

715 Center Street
Grayslake IL 60030
P: 847-752-2700
F: 847-752-2415
E: info@livorsi.com

Assembly Chart - Cummins Diesel 20'
Part Number: CMDH20

Start		Term	End		Term	Description
Loc'n	#		Loc'n	#		
B	A	1	A	E	2	Wire 18 Ga Black
B	B	1	A	C	2	Wire 18 Ga White
B	C	1	A	F	2	Wire 18 Ga Red
					1	Terminal, Pin, Delphi
					2	Terminal, Socket, Delphi
					A	Socket Housing, 6 Pos.
					B	Pin Housing, 3 Pos.
						Wire Seal
						Harness, Cummins Diesel 20'

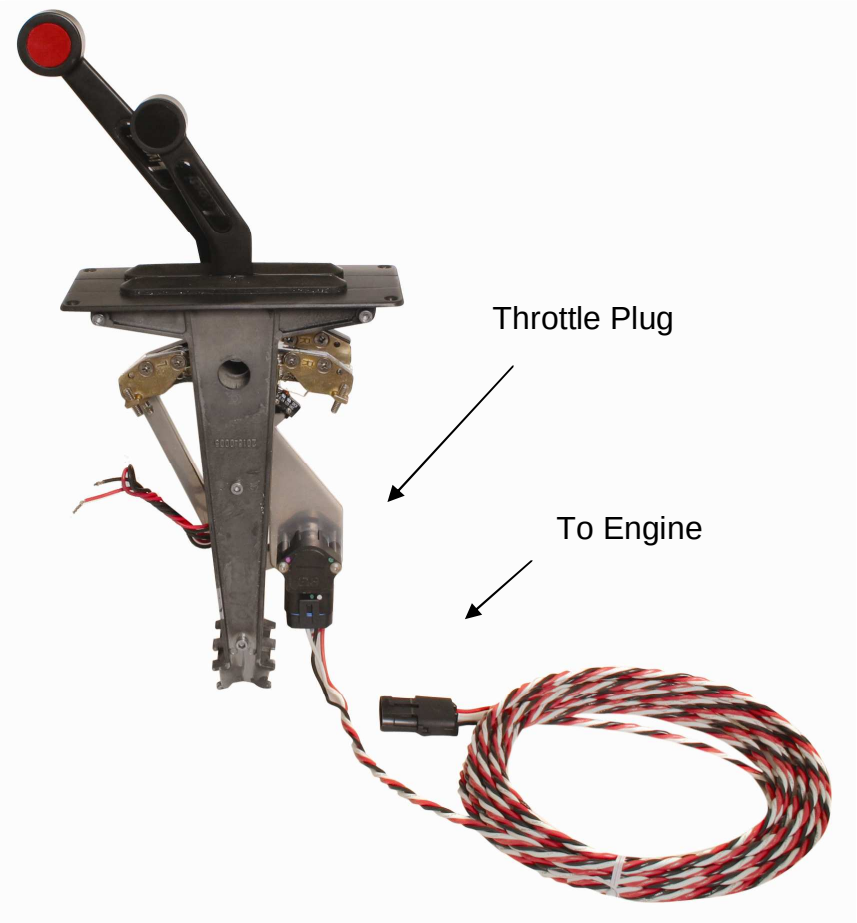

Livorsi Marine, Inc.® • livorsi.com

www.livorsi.com

The BEI Duncan 9900 Series offers a non-contacting Hall effect sensor in a rugged design, ideally suited for tight packaging constraints while providing superior reliability and durability. Unlike most similar products, the 9900 provide the full redundancy of two independent Hall detectors in a common package (single output sensors also available). Each Hall detector is rigidly supported to meet the severe durability requirements of demanding applications as automotive and off-highway. Rotating sintered magnets enable the stationary detectors to perform with improved accuracy and reliability, including excellent temperature stability and corrosion resistance. One-time factory programmability allows for greater flexibility in design and custom outputs.

Fully sealed, (meeting and/or exceeding IP66/IP67 standards) the 9900 is impervious to contamination and moisture. An integrally molded, 6-pin connector makes a sealed connection with industry standard Packard Electric connectors.

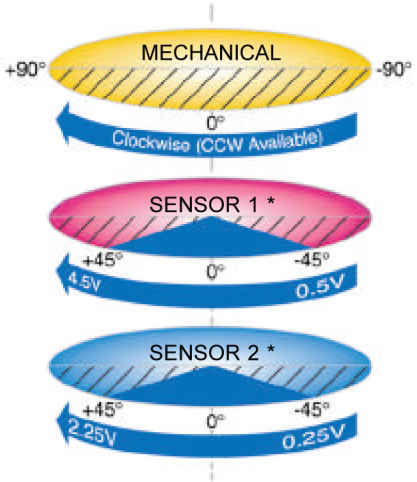

* OTHER OPTIONS AVAILABLE

9900 Series Features:

Rotating magnet/Fixed sensor configuration
Provides improved accuracy and reliability

Two independent outputs for redundancy
Full redundancy assures back-up safety

Fully programmable
Outputs; offset, gain, slope and temperature compensation

Sintered Alnico-8 magnets
Provide excellent temperature stability and corrosion resistance

Ratiometric Output

Factory programming through connector
After completion of assembly provides high accuracy

Sealed construction
IP66/IP67, 6-pin I/O Interface to Packard Electric Connector

Extended temperature range
-40º to +150ºC available optionally

Return spring (CW standard, CCW optional)
Eliminates mechanical backlash

Extended operating life
35 million operational cycles

Ordering Information:

990X XXX XX XX

- XX: Temperature Rating: Blank = Standard 85C, HT = 125C
- XX: Spring Return: CW = Clockwise, CCW = Counter Clockwise, NS = No Spring Return
- XXX: Electrical Angle: ie. 090 = ±45°, 120 = ±60°
- X: Number of Sensors: 1 = Single Output, 2 = Dual Output

SAMPLE: 9902 090 CW

- CW: Standard 85C
- 090: CW = Clockwise Spring Return
- 090: 90° (±45°) Electrical Angle
- 9902: Dual Output

Livorsi Marine Inc
715 Center Street
Grayslake IL 60030

P: 847-752-2700
F: 847-752-2415
E: sales@livorsi.com

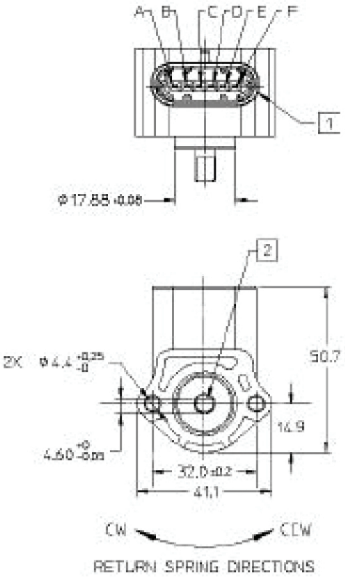

1 Connector mates with Packard Electric METRI-Pack 150.2 series (pull-to-seat 6 pin sealed connector assemblies) (i.e. 12162261, 12162260 or 12162210)

2 Shaft flat is shown with:
sensor 1 output at 50% Vs (input voltage).
sensor 2 output at 25% Vs (input voltage).

CONNECTOR PIN OUTPUT		
	SENSOR 1	SENSOR 2
Vs (input)	F	B
GROUND	E	A
OUTPUT	C	D

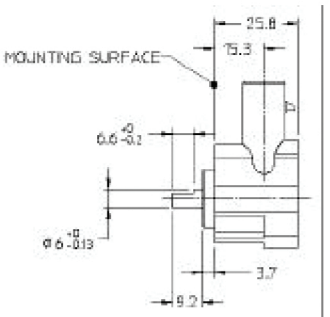

NOTE: All dimensions are shown in millimeters.

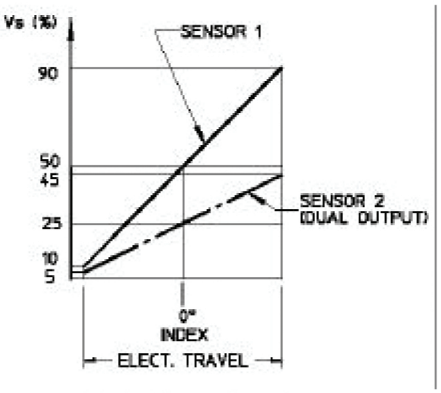

(Typical Sensor Output)

Mechanical Specifications

Mechanical Travel	-90° to +90° (180° total rotation)
Frequency Response	1,000Hz minimum
Rotational Torque	0.025 – 0.110 N-m
Weight	35 grams (approx.)

Electrical Specifications

Mechanical Input Range	-45° to +45° (other angles available)
Input Voltage	5.0 V ±0.25V DC
Input Current	10mA maximum per output 20mA maximum total
Sensor 1 Output	0.5V - 4.5V
Sensor 2 Output	0.25V – 2.25V (Different output voltage range for sensor outputs available as a custom option)
Accuracy	±2.0% of full scale at room temperature ±3.0% of full scale over operating temperature range
Resolution	Analog (continuous)

Environmental Specifications

Electromagnetic Compatibility	100V/meter, 14kHz – 1GHz range
Vibration	10G peak, 20 – 2,000 Hz
Shock	50Gs, half sine pulse, 5 m sec duration
Side Load	1kg for 1 million cycles
Operating temperature range	-40°C to +85°C (wider operating temperature –40° to +150°C available as a custom option)
Storage temperature range	-55°C to +105°C (-55°C to +165°C)

Livorsi Marine Inc
715 Center Street
Grayslake IL 60030

P: 847-752-2700
F: 847-752-2415
E: sales@livorsi.com